Mid infrared IBSG Optoelectronics

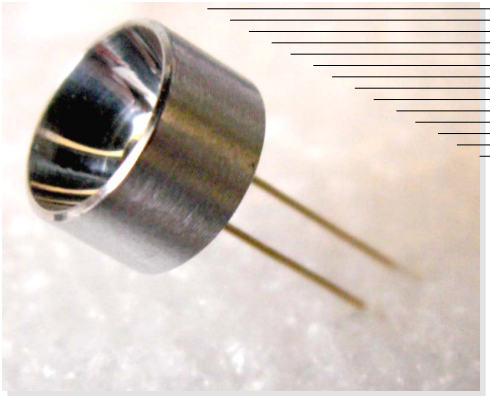

## Features

- High reliability
- Superior linearity
- Easy-to-use detector/amplifier modules are also available
- Parabolic reflector

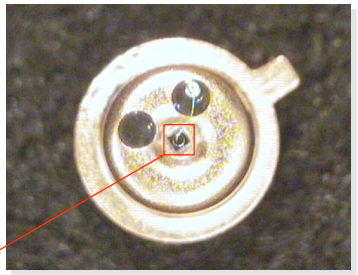

Photodiode CHIP

## Applications

- Environment measurements
- Gas analysis ($CH_4$, CO, $CO_2$)
- Infrared spectrophotometry
- Analytical instruments

## Accessories (optional)

- Amplifier AM-07M

## Description

Photodiode **PD48-03-WS-PR** is a model of photodetector wide spectral range (**WS**) for detection of radiation at room temperature in the Middle Infrared (Mid-IR) spectral range from 800 to 4800 nm.

Photodiode chip is disposed inside the standard 5.5 mm TO-18 package with parabolic reflector (**PR**).

Diameter of the photosensitive area of **PD48-03-WS-PR** is 300 µm. High speed of response makes it possible for detection of modulated radiation of laser diodes (LDs) and light-emitting diodes (LEDs). **PR** allows to increase detectivity of the photodiode by a factor of 10 in the case of parallel beam of radiation.

Related products: **PD48-03-WS-PR** can be used in optical pair with our LED38...LED46.

## General characteristics

**WS** - wide spectrum

| Package | Parameter | Symbol | Value | Unit |
|---|---|---|---|---|
| **TO-18 with PR** | Sensitive area diameter | d | 0.3 | mm |
| | Weight | m | 0.65 | g |
| | Operating temperature | $T_{opr}$ | −200…+60 | °C |
| | Window material | | no | |
| | Soldering temperature | $T_s$ | +230 | °C |
| | Storage temperature | $T_{stg}$ | −55…+70 | °C |
| | Maximum reverse bias voltage | V | −0.5 | V |
| | Size | D | 9.0 | mm |
| | | H | 18.5 | |

IBSG Co., Ltd.
26 Polytekhnicheskaya str.
Saint Petersburg
194021
RUSSIA

+7 (812) 292 7956, +7 (812) 292 7929
+7 (812) 297 0006
IBSG.inform@gmail.com
www.ibsg.ru
www.ibsg-st-petersburg.com

## Electrical and optical characteristics

| Parameter | Symbol | Condition T ≈ +20°C | Min. | Typ. | Max. | Unit |
|---|---|---|---|---|---|---|
| Spectral sensitivity range | $\lambda$ | at level 10% | | 0.8 - 4.8 | | µm |
| Peak sensitivity wavelength | $\lambda_p$ | at level 90% | | 3.9 - 4.2 | | µm |
| Photo sensitivity | S | at $\lambda_P$ | 0.6 | 0.7 | 0.8 | A/W |
| Detectivity | D* | at $\lambda_P$ | $5\cdot10^{8}$ | $7\cdot10^{8}$ | $8\cdot10^{8}$ | $cm\cdot Hz^{½}\cdot W^{-1}$ |
| Dark current | $I_d$ | V = −0.1 V | 0.6 | 0.9 | 1.2 | mA |
| Capacitance | C | V = 0 V, f = 1 MHz | 25 | 30 | 50 | pF |
| Rise time | $t_r$ | V = 0 V, $R_L$ = 50 Ω | | ≤20 | | ns |
| Fall time | $t_f$ | | | | | |
| Shunt resistance | $R_0$ | V ≈ −10 mV | 100 | 150 - 200 | 500 | Ω |
| Noise equivalent power | NEP | at D* | $1.1\cdot10^{-10}$ | $7.6\cdot10^{-11}$ | $6.7\cdot10^{-11}$ | $W\cdot Hz^{-½}$ |

IBSG Co., Ltd.
26 Polytekhnicheskaya str.
Saint Petersburg
194021
RUSSIA

+7 (812) 292 7956, +7 (812) 292 7929
+7 (812) 297 0006
IBSG.inform@gmail.com
www.ibsg.ru
www.ibsg-st-petersburg.com

## Spectral response

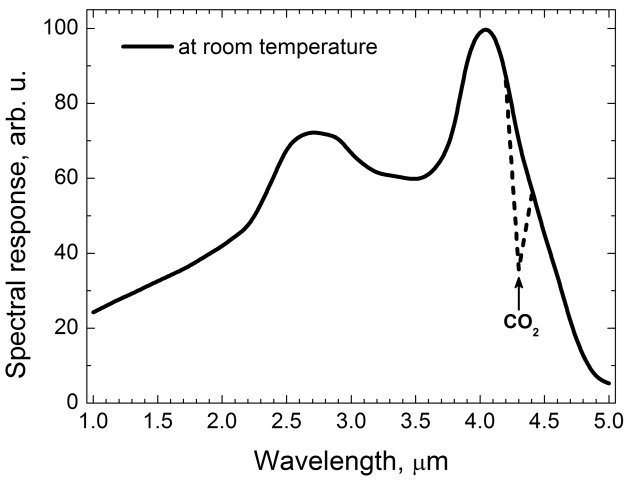


## Dark current vs. reverse voltage

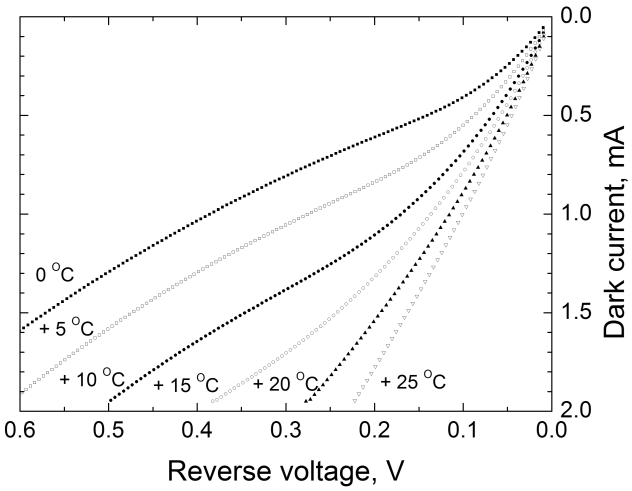


## Shunt resistance vs. element temperature

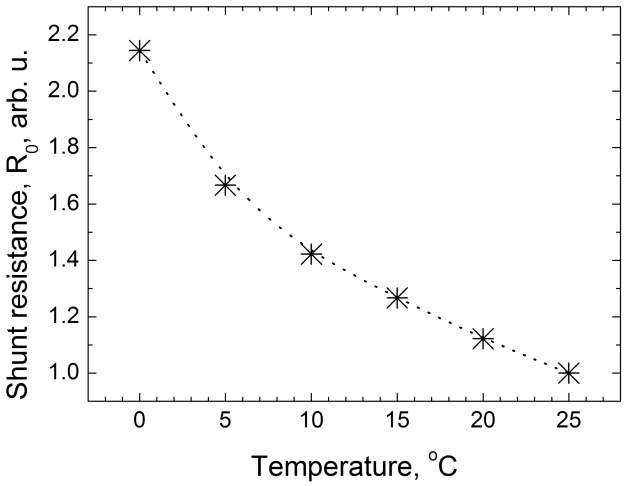


## Capacitance vs. reverse voltage

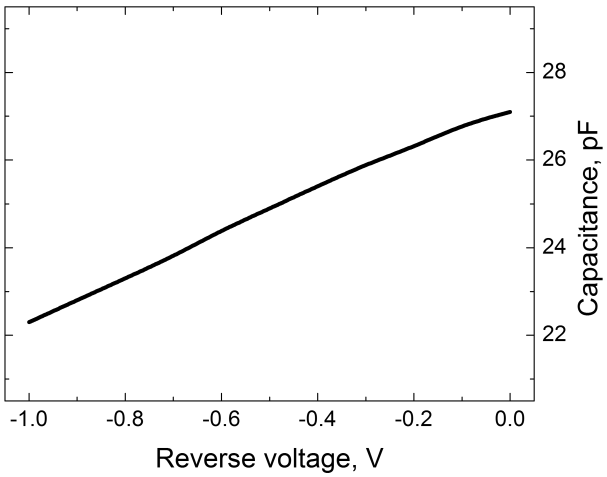


IBSG Co., Ltd.
26 Polytekhnicheskaya str.
Saint Petersburg
194021
RUSSIA

+7 (812) 292 7956, +7 (812) 292 7929
+7 (812) 297 0006
IBSG.inform@gmail.com
www.ibsg.ru
www.ibsg-st-petersburg.com

## TO-18 package with PR dimensions (unit: mm)

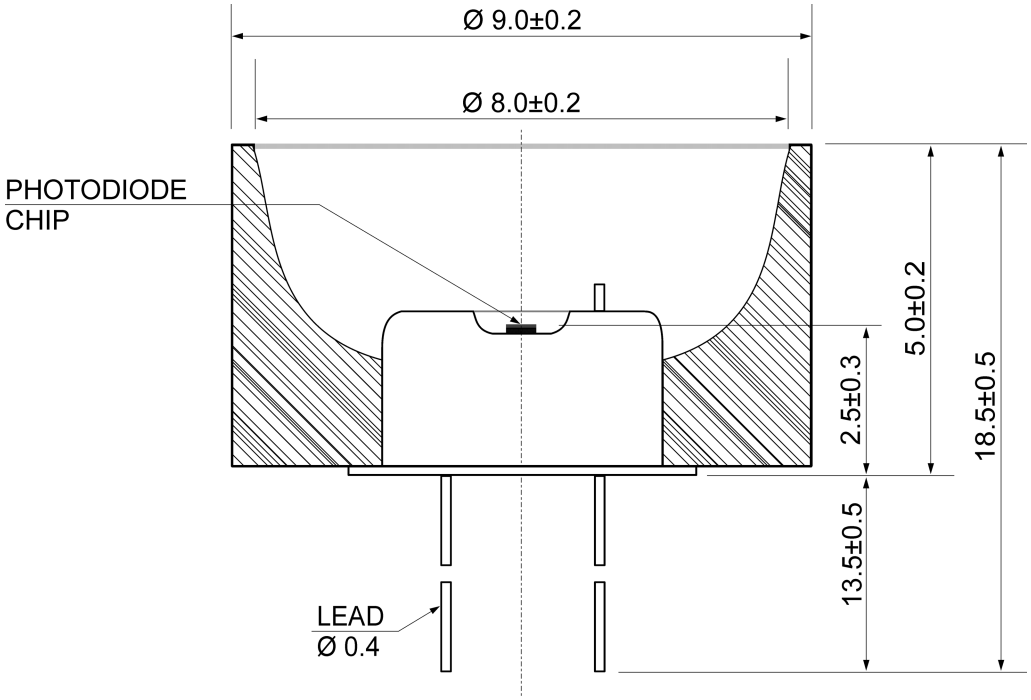


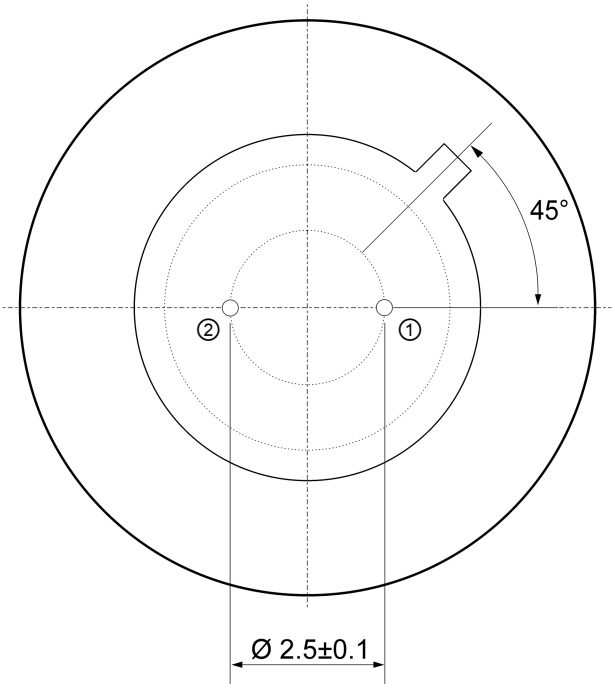


| Pin | Description |
|---|---|
| ① | Detector (anode)* |
| ② | Detector (cathode)* |

*Special order: the pin polarity can be changed.

IBSG Co., Ltd.
26 Polytekhnicheskaya str.
Saint Petersburg
194021
RUSSIA

+7 (812) 292 7956, +7 (812) 292 7929
+7 (812) 297 0006
IBSG.inform@gmail.com
www.ibsg.ru
www.ibsg-st-petersburg.com